WOODTURNERS
OF THE
GOULBURN VALLEY INC

A0003352K

VOLUME 28 – No. 11
NOVEMBER 2014
NEWSLETTER

DON McCRABB – PRESIDENT
PHONE – 0404245441
CHRIS HARVEY – SECRETARY
PHONE – 0407320102
CLUB PHONE – 0435940502
POSTAL ADDRESS
P.O. BOX 2071, SHEPPARTON, VIC. 3632
96 PACKHAM ST., SHEPPARTON

W.T.G.V .INC. COMMITTEE
PRESIDENT – DON McCRABB
SECRETARY – CHRIS HARVEY
TREASURER – VERN MARVEN
VICE PRESIDENT – PERRIE BULLOCK
PUBLIC OFFICER - CHRIS HARVEY
WORKSHOP MANAGER – WILLIS MUNDY
COMMITTEE MEMBERS
LINDSAY WHITFORT, LEN TAYLOR,
ATHEL CHAPMAN, TRISH PEDROTTI, GREG THORNE
AUDITOR – JUSTIN HOCKING
NEWSLETTER EDITOR – NORMA HARRISON
ALMONER – LORRAINE NOONAN

PRESIDENT'S PAGE – NOVEMBER

Christmas is getting closer, I hope all those presents are close to finish, if not you will have to start the night shift which is not a bad idea after these warm days.

Night groups are going well keeping the usual three supervisors busy on Wednesday night, I'm not sure how Len is managing with Willis out of action after he had his shoulder operated on. We hope to see Willis at the General Meeting and he can tell us all about his operation. Not a lot of action in the workshop in the mornings which is disappointing. We have a well equipped workshop and it surprises me that members don't take advantage of this.

I went to get the CRC from the cupboard in the noisy room the other day and found it missing so I went for a walk around the workshop and found it, the Leprechauns had hidden it in the timber rack. It would be good if members would put things back where they belong.

The Christmas party is coming up soon, so could you let us know if you are coming so we know how many to cater for. All those fancy Candle Sticks will have to be judged by everyone and a few articles of "show and no tell" would be nice for the members partners who don't come to our workshop or meetings to have a look at and see what goes on in the workshop.

Melbourne Woodshow was OK but it appears to be getting smaller, it will be interesting to see how long it will keep going. Our own Woodshow is not that far away and we should all be getting ourselves ready for that. This year we will have two new stands, one will be all about routers and accessories, the other will be Col Hosie with Gifkins Dovetail Jig. Both of these will be worth checking out.

Adding Australian Woodworker magazines to the library the other day I found that some of the early ones have disappeared and not booked out, is it possible that someone has a better collection than the club, I hope not.

This year the club will be closing on Saturday December 20th which will be a clean up day so that we can come back to a clean workshop on Tuesday 6th January.

Carl and Frank are doing a great job on the handrail in front of the container. The locking of the container is now a chain and padlock job, the latches for the original locking have all been cut away by the undesirables. They appear to have a new toy, a battery operated angle grinder and when they get into the container they don't take anything.

We usually don't have a Newsletter in December so a Merry Christmas and a Wood Working New Year to all.

Don Mc. President

WOODTURNERS OF THE GOULBURN VALLEY INC. 3352K

NOTICE OF GENERAL MEETING

To be held at the Clubrooms, 96 Packham Street, Shepparton

Monday 17th November, 2014 at 7.30 p.m.

Apologies
Toy Distribution to Charities
Minutes
Correspondence
Treasurer's Report
Committee Business
General Business

Door & Raffle – Trish Pedrotti, Geoff Pinkerton
Show & Tell Chairman – Rob Blamey

If you are unable to attend and do your turn, please arrange prior to the meeting for someone else to take your place.

SPC ARDMONA
Factory Sales

"Owned and run by locals for locals"
Discover the big line up of top Australian brands.
Save up to 70% off leading brands.
We are excited to announce the introduction of an all new dedicated frozen and chilled section to the store.
You can now purchase big brand frozen and chilled products at discounted prices.
Relax and enjoy fine foods, great coffee and cakes at Peaches Café
197-205 Corio St, SHEPPARTON, 3630 VIC
www.spcardmonafactorysales.com.au
Open 7 days a week
Monday – Friday 9am-6pm
Saturday & Sunday 9am-5pm
CLOSED Christmas Day, Boxing Day, New Years Day, Good Friday & Anzac Day

MINUTES OF GENERAL MEETING OF WOODTURNERS OF THE GOULBURN VALLEY INC.

Held in the clubrooms, 96 Packham Street, Shepparton, 20/10/2014

OPENING: President Don McCrabb opened the meeting at 7.34 pm with 31 members in attendance, John & Ros Wright were welcomed to the meeting.

VISITORS: Brian Smedley was welcomed to the meeting.

APOLOGIES: 9 apologies were received, moved Rob Blamey that the apologies be accepted, seconded Ian Smith.

MINUTES: Minutes of the previous meeting as circulated in the newsletter were accepted. Moved Jim Harrison seconded Perrie Bullock.

BUSINESS ARISING MINUTES: nil.

CORRESPONDENCE: 16 newsletters from various clubs and organisations.

1. Letter of thanks re honorary membership from Viv Parry, subs of $40 donated to the club. 2. Australian Wood Review No. 84 – in Library. 3. Toolamba Christmas Twilight Festival approving our application for site to demo & sell raffle tickets. 4. Jeanette Powell accepting invitation to present toys at next meeting but declining to draw the raffle prizes at the Woodshow. 5. Flyer re Wood Working Skills Day 30/11/14 Ballarat. 6. Bonum Sawmill (Barham) Auction flyer. 7. H.T.P.A.A. Tool Sale 9/11/14. 8. Echuca Moama Artists invitation to have a site at their 60th anniversary celebration 'Art in the Park' 8/11/14. Which is the same day as Pops Shed & Eltham Woodshow – invitation to be declined. 9. Preliminary notice of the 2015 N.E Gathering at Albury/Wodonga 18th April, 2015. 10. Email James McEwan re timber donation.

Out: 1. Jeanette Powell re toy presentation & raffle draw. 2. Letters to Jim Harrison & Viv Parry re honorary membership. 3. Letter to Eltham Woodies re suggestions of bus parking whilst attending their show – bus parking resolved. Moved Vern Marven that the correspondence be accepted, seconded Willis Mundy, carried.

TREASURER'S REPORT:

Balance 31/08/14	$16253.90
Receipts	$2297.00
	$18550.90
Less Expenditure	$5261.95
Balance 31/09/14	$13288.05

Moved Dick Syer that the Treasurer's report is accepted, seconded Noel Ryan, cd.

COMMITTEE BUSINESS: 1. Bunnings have donated some small containers of stain left over from Kidsfest and have asked that we conduct an in store demo between now and Christmas. 15th November has been suggested as the suitable date. 2. Shepp. Show: Although it was disappointing that very few members made themselves available to assist Len to set up our site on the Thursday, over the two days of the show we sold $205 worth of toys, this amount included a $50 donation from Fred Elliott as a result of selling one of his 'B' double trucks. We also received donations of $17.55. A bn

received donations of $17.55. A big thanks to all those members who did assist Len on the Thursday and to all those who manned the site over the two days.
3. The new club banner is now complete and in use. Neil Armstrong moved that the club purchase a second banner with some minor adjustments to the word spacing, seconded by Jim Harrison, carried. 4. The welding of the new railing to the container is being done by Carl Walker and Frank Matthews in conjunction with the school. 5. Some Silky Oak from Lorraine Noonan's place is to be brought to the club rooms and will be made available to members at $5 a super foot and some stored for future raffle prizes. Alex Trotter to assist with transport.
6. Letters of appreciation are to be sent to Rupe and Dot Brown for the creation of the cradles, and to Wendy Cook who sewed the bedding for club made cradles. 7. We have agreed to allow the Textile and Art Group to display signage to their show at the entrance to the Eastbank for the duration of our Woodshow. The signage is to advise visitors of the upstairs location of the show which is held at the same time as the Woodshow. 8. Club Sponsors are to be added to the newsletter mailing list. 9. Greg & Glenda Thorne have indicated their willingness to sell raffle tickets and conduct a demo at the Toolamba Christmas Festival on 13/12/14. They will require some assistance so, any members who are not intending to attend the Christmas function, please contact Greg if you are able to assist. 10. Lindsay Whitfort's son has donated a belt type loud speaker system to the club, more details available when it arrives. 11. Melbourne Woodshow bus to leave the library car park at 8 am and leave Melbourne for the return journey at 3.30 pm. In relation to the cost to members after some discussion Dick Syer moved that the cost to members attending the Woodshow be set at $40 which includes the bus fare and the show entry, seconded Max Gillard. The bus trip to Pops Shed/Eltham Woodshow was also discussed and as there are only 18 members on the list to go, the price of a 24 seater bus is to be obtained by Neil Armstrong. 12. Membership application from Paul Berg has been approved. 13. Willis will be out of action for a few weeks following a shoulder operation. 14. Ryan Taylor has been asked to investigate a cable to enable the playing of DVD's on the big screen.
GENERAL BUSINESS: 1. Jim Harrison thanked the committee and the members for granting him honorary membership. 2. Rob Blamey raised the matter of the new drop saw being jammed with a piece of wood. **All members must report such occurrences to the supervisor of the day.** As with all machinery, things go wrong but it is imperative that they be fixed a.s.a.p. to prevent any damage to the equipment. Notice to be put in the newsletter. 3. Woodshow Report: The upcoming Show is our 25th and any ideas on how we might mark this occasion would be welcome. One suggestion is 25th Anniversary balloons. We are still waiting to hear about sponsorship from the Bendigo Bank. Vern to follow up as we need to get the sponsorship banner updated and flyers printed a.s.a.p. As the people from Gifkins Jigs will be at the

SHOW & TELL – 20th OCTOBER 2014

BARRY HUFTON 3 Salt & Pepper Shakers, Purple Heart, Chile Marple, Red Gum finished with Glow. 2 Pot Pouri Bowls, firebox wood, finished with wax.
FRANK MATTHEWS Small child's Chair, Pine, to be painted.
DON McCRABB Segmented Vase, mixed timbers, Marine Estapol finish.
RAY McDONALD Document Box (for Woodshow Raffle) Bulloak.

Minutes continued.

Show Alf Hayes & Rob Blamey will be allocated other tasks. CWC grants for assistance with the Woodshow are being investigated. 4. Frank Matthews will be assisting Len on a couple of Thursday nights while Willis is out of action, along with Greg Thorne & Vern Marven. 5. As a result of a contact at the Shepp. Show, Margaret Adamson has been given a clock and asked if any of our members might be able to fix it as it does not keep time. Vern to investigate.

Meeting closed at 8.45 pm.

RAFFLE: 1st Trish Pedrotti – Casuarina Timber. 2nd. Rob Blamey – Glue.
3rd Geoff Pinkerton – Back Scratcher. 4th John Wright – Orbital Sander Attachment. 5th Perrie Bullock – Tulip Bud Candle Holder. 6th Len Taylor – Woodshow ticket. 7th Marilyn Behncke – Woodshow ticket.

DEMONSTRATION: Inlaid Segmented Plugs – GREG THORNE

Greg demonstrated how by inlaying segmented plugs, it can transform plain timber into a feature element. By cutting and gluing small wedges of different coloured timbers to form a plug which is then turned down to a cylinder. The base is glued to a backing block which is attached to a face plate by screws. A recess is then cut into the base using a parting tool but alternatively a forstner bit could be used. Greg explained that any offset recesses could be achieved with a forstner bit. Once the plug is in place Greg then proceeds to construct a segmented item by putting together as many segmented rings as is required. It is essential that the callipers are used when working on this project. Greg's plug was too snug of a fit and after many members attempted to remove it they gave up to inspect a segmented bowl with inlaid plug inserted into the base. Thanks Greg. *Chris*

SHEPPARTON AGRICULTURAL SHOW – 10th/11th OCTOBER

In order for the club to conduct a demonstration at the Shepp. Ag. Show we need to set up the day before, so it was very disappointing that very few members turned up to assist Len with the transport of, and setting up of equipment on Thursday. A big thanks to those who did turn up. As we all get a bit older this type of activity gets a bit harder so **all members** are asked to consider assisting whenever possible. Don't leave all the hard work to just a few regulars, as these events are for the benefit of our club and all it's members.

Enough of the grumbles. Friday at the show was rather quiet and not a lot of activity, except at our stand where Mary, Chrissy and Norma demonstrated pyrography, while Lorraine, Perrie & Len turned a few bowls. Nina & Ron demonstrated their scroll sawing skills, the toy sales table was manned by Noel & Podge, and Jim assembled Pens. Despite the effort by these members we only sold 1 mallet for $3. I think the highlight of the day might have been Len's invention of a chuck key made from a pair of multi grips and a hexagonal head screw!

Saturday was a bit busier, thank goodness, which saw the sale of 9 toys including Fred's 'B' Double truck. Overall the club made $205 in toy sales and $17.55 in donations. Jim sold a few pens, Nina & Ron appeared to be doing a steady trade with their scroll saw items and one of Len's Breadboards found a new home. Saturday's turners, Lorraine, Gary, Trish and Chris produced a couple of bowls and Chris turned a number of spinning tops which were given away to kids.

Although this year's show was a bit quiet having our site near the Gem Club gave us an opportunity to admire some of their beautiful gems and interact with their members. The variety of stones etc. available seems to be greater than the varieties of timber available to us to work with, but maybe there is an idea or two about combining the two materials into one project.

Saturday 5 pm was pack up time and thanks to Len, Perrie and Alf, who returned from visiting Rubicon and the Eildon Woodshow, all the equipment was once again loaded into Len's ute with the overflow in Chris's ute and returned to the club rooms, only to have to be packed away that evening to ensure the clubrooms were neat and tidy for Sunday for the Council of Woodwork Club's AGM. Thanks to all the members who attended and assisted over the two days for the job well done. *Chris Harvey*

SCROLL SAW BLADES

We are Australian Distributors for the Swiss made **Pégas®** blades. These are available in both pinless and pinned. We also sell the German made **Flying Dutchman** blades. Pinless are $4.50 a dozen, while pinned are $6 a dozen. **3" blades** are $5 a dozen
Swiss Made Coping Saw Blades available for $5 doz.
We also sell .Mini chucks and mini twist drills.
.Foot Switches for $60
Proportional scales for $9.50 – a handy tool.
We are agents for Hegner products.
All prices are plus postage.
….Contact us for a blade catalogue….

Helen Harris

PO Box 1384, Murray Bridge SA 5253
Ph 08 8531 3440
0428 826 224
PLEASE NOTE OUR NEW EMAIL ADDRESS
Email—ochjh@scrolling.com.au

CLUB'S CHRISTMAS DINNER

At Croquet Club Rooms, Winston Street, Shepparton
on
Saturday 13th December
from 6.30 p.m. onwards
2 Course Meal to be served at 7 p.m. $20 per person
Raffle and table competitions
The club competition as announced in August Newsletter is a Candlestick – to be judged by popular vote. If not attending the Dinner, your candlestick can be left at office Thursday 11th
BYO drinks – please be responsible driving home.
Please advise Secretary Chris (phone 0407320102)
or place your name on Whiteboard at Clubrooms by Saturday 6th December to enable catering arrangements .

WOODTURNERS OF THE GOULBURN VALLEY INC
APPRECIATES RECEIVING SPONSORSHIP FROM THE FOLLOWING BUSINESSES:
MOOROOPNA MITRE 10, FRUIT GROWERS VICTORIA,
SPC/ARDMONA FACTORY SALES, MAXAM PRINTING,
G.V. WEATHERMASTER and BENDIGO BANK
PLEASE SUPPORT THEM AS THEY SUPPORT US

TO OUR MEMBERS AND ANY OF THEIR FAMILY WHO ARE NOT WELL OR ARE IN HOSPITAL, THE CLUB WISHES THEM A SPEEDY RECOVERY

W.T.G.V. WEBSITE - www.woodturnersgv.com
Our newsletter can be seen in colour on website.

WELCOME TO NEW MEMBERS

The club welcomes new members Paul and Barbara Berg from Tatura to the club. We hope that you enjoy your experiences with us and that you join in all the club's activities. Please make them welcome and introduce yourselves to them.

FOR SALE

Woodfast Bowl Lathe – MH400H
4 speed shaft 1 by 10 on heavy steel frame
1 hp. motor Frame extends to 1200 – 1500 mm.
Drive and Live Centres, Clutch, 140 mm Vicmark and Jam Chucks
3 Point Steady Attachment for outboard turning; 2 Banjos
Several tool rails; numerous face plates.
Large Sanding Disc with Plate.
Factory Tools plus 1/2 doz. home made
Frame can be fitted with removable castors for moving.
I can lift to load. **Cost $750.00**
Enquiries: Bryan Finlayson Phone 03 58231530

MEMBERS PLEASE NOTE

The 2015 Woodshow Raffle roster has been drawn up and is available for members perusal. If your allotted times do not suit, please arrange your preferred times with another member and note it on the roster.
Greg Thorne, Raffle Coordinator

COUNCIL OF WOODWORK CLUBS – AGM

On Sunday the 12th October, 2014 we hosted the CWC AGM at our club rooms. In all we had 12 visitors from then CWC who attended the meeting along with 9 of our own members, Don, Len & Jan, Perrie, Lindsay, Jim & Norma, Trish and Chris.

Prior to the meeting commencing at 11 am, we all enjoyed a 'cuppa' and a variety of sandwiches, cakes and slices.

During the meeting Rob Allen, CWC President, spoke about the number of clubs around Australia, struggling for survival and the importance of recruiting younger members. It appears that our club is currently in a reasonable position as far as membership goes, but it is vital that we continue to get more younger members involved in all areas of the club.

It was also heartening to hear that our club in no way was blamed for the incident involving Geoff Baker and it was purely an economic decision for the insurance company to settle the matter out of court.

At the conclusion of the meeting we all enjoyed a BBQ lunch and a chat about different aspects of wood working, etc. Thanks to Trish for buying the lunch ingredients and to Trish, Jim and Jan for cooking the BBQ.

Chris Harvey

Left: Lorraine Noonan at Shepparton Ag. Show 11/10/14

Right: Greg Thorne with his Demonstration of Plugged Segmented Work, at General Meeting October.

Safe and sound

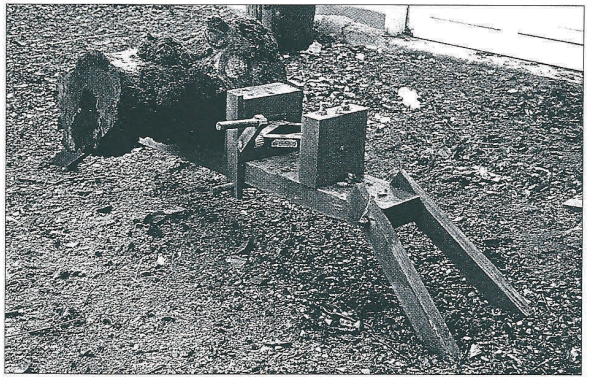

Frank McCann tells how you can avoid chainsaw mishaps by making this sturdy woodholding vice

A chainsaw expert who recently gave a talk to our woodturning group, was horrified at our attempts to cut fairly small, irregular pieces of wood without any means of holding them steady. Here's my solution to the problem.

Basically, it's a vice made from a scissors type of car jack mounted horizontally between two fixed timber blocks on a sturdy base. The four short legs are splayed lengthways and sideways.

Drill the car jack so it can be bolted to one of the fixed blocks and then to a third block attached to the moving end of the jack. The fixed blocks and the legs are secured to the base by threaded bar, nuts and washers.

I cut a fourth block, measuring 230 x 230 x 75mm (9 x 9 x 3in) in half to form two blocks 230 x 230 x 38mm (9 x 9 x 1½in).

If you don't have a saw to cut the blocks to this size, cut them in half first, ie. 230 x 115 x 75mm (9 x 4½ x 3in) and then into 9 x 4½ x 1½in.

Through each of the two blocks put 12 x 1¾in (44mm) screws, the points protruding through one side.

Screw one half-block to the face of the moving block, the other to the face of the end block, points outward, which gives a good grip. I'd considered gluing them on, but remembered that I might need to remove them to replace worn screw points.

The moving block wedges the workpiece against the fixed block at the other end. If you want to protect the workpiece from the screw points, simply insert a 'packer.'

Remember to recess the hole in the moving block for the bolt which will secure the jack to it, so the screw point block will sit flush on it. Get two pieces of wood 75 x 25mm (3 x 1in) and cut them about 380mm (15in) long and drill a 25mm (1in) hole in one end of each. Screw these to the side of the moving block with the end with the hole in it protruding just below the base. Pass a length of 25mm (1in) brush handle beneath ➤

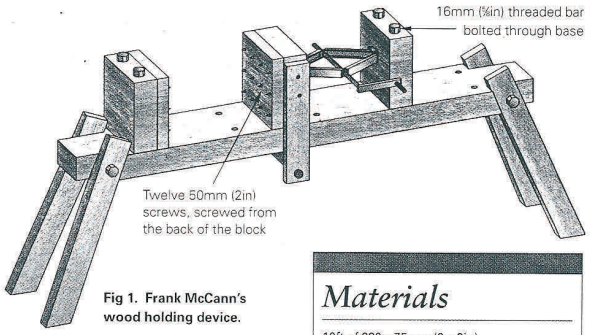

Fig 1. Frank McCann's wood holding device.

Materials

10ft of 230 x 75mm (9 x 3in) softwood	approx £10
Two 990mm (39in) long ⅜in threaded bar	approx £15
Twelve ⅜in nuts	
Two ⅜in large flange washers	£2.40
Two ¼in x 4in dome top bolts, plus nuts and washer (to secure jack to blocks)	£0.80
Twenty-four 1¾in No 10 woodscrews	£0.70
One brush handle	£0.90
Two ⅜in dowels	
Scissors car jack (from scrap yard)	£5.00
4 pints wood preservative	£3.00
TOTAL	**£37.80**

COMING EVENTS

Trip to Pop's Shed/Eltham Woodshow – Saturday 8th November
General Meeting – Monday 17th Nov. – Toys to Charities
W.T.G.V. Christmas Dinner – Sat. 13th December

18th April, 2015 – Nth.East Gathering – Albury/Wodonga

WORKSHOP SUPERVISOR ROSTER

Tues	Thurs.	Sat.
11/11 Perrie	13/11 Ian	15/11 Carl
18/11 Willis	20/11 Lindsay	22/11 Perrie
25/11 Vern	27/11 Carl	29/11 David
2/12 Greg	4/12 Willis	6/12 Lindsay
9/12 John	11/12 Ian	13/12 David
16/12 Vern	18/12 Lindsay	20/12 Carl

Clubrooms closed until Tuesday 6/1/15
Wednesday p.m. Don McC plus supervisors
Thursdays p.m. Len plus supervisors

AVAILABLE TO MEMBERS FROM
WORSHOP
AVXL VP GLUE 500 ml
MOBILCER END SEALER 1 litre
JOINING BISCUITS PACK OF 50
DOWELS PACK OF 50 – 8,10 AND 11 mm
WOODSCREWS VARIOUS SIZES
SANDPAPER – BELT, SHEET & VELCRO
BANDSAW BLADES MADE TO SUIT
CLUB LIBRARY
BOOKS, MAGAZINES, VIDEOS & DVDS
AVAILABLE FOR ONE MONTH LOAN